D40S-9, D45SC-9

Mast type	Maximum Fork Height	Maximum Lowered Height	Fully Extended Height	Free Lift	Rated Load Capacities							
					D40S-9, D45SC-9							
			With Load Backrest	With Load Backrest	Tilt Angle				Load Capacities			
					Single Pneumatics		Double Pneumatics		Single Pneumatics		Double Pneumatics	
					FWD	BWD	FWD	BWD	LC 500mm	LC 600mm	LC 500mm	LC 600mm
	mm	mm	mm	mm	deg	deg	deg	deg	kg	kg	kg	kg
STD	3,000	2,235	4,260	155	8	10	8	10	4,500	4,115	4,500	4,115
	3,300	2,385	4,560	155	8	10	8	10	4,500	4,115	4,500	4,115
	3,650	2,560	4,910	155	8	10	8	10	4,500	4,115	4,500	4,115
	4,000	2,885	5,260	155	8	10	8	10	4,500	4,115	4,500	4,115
	4,250	3,010	5,510	155	8	10	8	10	4,500	4,115	4,500	4,115
	4,850	3,460	6,110	155	8	8	8	8	4,000	3,655	4,400	4,115
	5,250	3,660	6,510	155	8	5	8	8	3,700	3,380	4,250	3,885
FF	3,000	2,215	4,235	1,015	8	10	8	10	4,500	4,115	4,500	4,115
FFT	4,000	2,095	5,260	895	8	8	8	8	4,500	4,115	4,500	4,115
	4,250	2,185	5,525	985	8	8	8	8	4,500	4,115	4,500	4,115
	4,500	2,270	5,780	1,070	8	8	8	8	4,500	4,115	4,500	4,115
	4,700	2,335	5,975	1,135	8	5	8	8	4,500	4,115	4,500	4,115
	5,150	2,485	6,425	1,285	8	5	8	8	4,200	3,845	4,300	3,935
	5,600	2,635	6,875	1,435	8	3	8	5	3,700	3,385	4,150	3,795
	6,050	2,785	7,325	1,585	8	3	8	3	2,900	2,655	4,000	3,660
	6,500	2,935	7,775	1,735	8	3	8	3	2,250	2,060	3,850	3,525
	7,000	3,115	8,275	1,915	8	3	8	3	1,650	1,510	3,700	3,385

D45S-9, D50SC-9

Mast type	Maximum Fork Height	Maximum Lowered Height	Fully Extended Height	Free Lift	Rated Load Capacities							
					D45S-9, D50SC-9							
			With Load Backrest	With Load Backrest	Tilt Angle				Load Capacities			
					Single Pneumatics		Double Pneumatics		Single Pneumatics		Double Pneumatics	
					FWD	BWD	FWD	BWD	LC 500mm	LC 600mm	LC 500mm	LC 600mm
	mm	mm	mm	mm	deg	deg	deg	deg	kg	kg	kg	kg
STD	3,000	2,220	4,410	155	8	10	8	10	5,000	4,570	5,000	4,570
	3,300	2,370	4,710	155	8	10	8	10	5,000	4,570	5,000	4,570
	3,450	2,445	4,860	155	8	10	8	10	5,000	4,570	5,000	4,570
	3,650	2,545	5,060	155	8	10	8	10	5,000	4,570	5,000	4,570
	4,000	2,870	5,410	155	8	10	8	10	4,950	4,525	5,000	4,570
	4,250	2,995	5,660	155	8	10	8	10	4,850	4,430	5,000	4,570
	4,850	3,455	6,260	155	8	8	8	10	4,400	4,020	4,700	4,295
	5,500	3,770	6,910	155	8	5	8	8	3,950	3,610	4,450	4,065
FF	3,000	2,200	4,385	850	8	10	8	10	5,000	4,570	5,000	4,570
FFT	3,700	1,985	5,115	635	8	8	8	8	5,000	4,570	5,000	4,575
	4,000	2,080	5,410	730	8	8	8	8	5,000	4,570	5,000	4,575
	4,250	2,170	5,675	820	8	8	8	8	5,000	4,570	5,000	4,575
	4,500	2,255	5,930	905	8	8	8	8	5,000	4,570	5,000	4,575
	4,700	2,320	6,125	970	8	5	8	8	5,000	4,570	5,000	4,575
	5,150	2,470	6,575	1,120	8	5	8	8	4,550	4,165	4,700	4,300
	5,600	2,620	7,025	1,270	8	3	8	5	4,400	4,025	4,550	4,165
	6,050	2,770	7,475	1,420	8	3	8	3	3,400	3,110	4,350	3,980
	6,500	2,920	7,925	1,570	8	3	8	3	2,700	2,470	4,200	3,845

Note : Mast Specifications & Rated Capacities are based on standard chassis with pneumatic tire and without side shifter.

D50C-9, D55SC-9

Mast type	Maximum Fork Height	Maximum Lowered Height	Fully Extended Height	Free Lift	Rated Load Capacities							
					D50C-9, D55SC-9							
			With Load Backrest	With Load Backrest	Tilt Angle				Load Capacities			
					Single Pneumatics		Double Pneumatics		Single Pneumatics		Double Pneumatics	
					FWD	BWD	FWD	BWD	LC 500mm	LC60omm	LC500mm	LC60omm
	mm	mm	mm	mm	deg	deg	deg	deg	kg	kg	kg	kg
STD	2,750	2,220	4,160	165	8	10	8	10	5,500	5,030	5,500	5,030
	3,050	2,370	4,460	165	8	10	8	10	5,500	5,030	5,500	5,030
	3,400	2,545	4,810	165	8	10	8	10	5,500	5,030	5,500	5,030
	3,750	2,870	5,160	165	8	10	8	10	5,500	5,030	5,500	5,030
	4,000	2,995	5,410	165	8	10	8	10	5,350	4,895	5,500	5,030
	4,600	3,445	6,010	165	8	10	8	10	5,050	4,620	5,200	4,755
	5,000	3,645	6,410	165	8	5	8	10	4,400	4,025	5,000	4,575
	5,500	3,895	6,910	165	8	5	8	8	3,250	2,975	4,800	4,390
	5,800	4,045	7,210	165	8	5	8	8	2,650	2,425	4,700	4,300
FF	2,875	2,200	4,260	860	8	10	8	10	5,500	5,030	5,500	5,030
FFT	3,575	1,985	4,990	645	8	8	8	8	5,500	5,030	5,500	5,035
	3,875	2,080	5,285	740	8	8	8	8	5,500	5,035	5,500	5,035
	4,125	2,170	5,550	830	8	8	8	8	5,500	5,035	5,500	5,035
	4,575	2,320	6,000	980	8	5	8	5	5,500	5,035	5,450	5,035
	5,025	2,470	6,450	1,130	8	5	8	5	4,900	4,485	5,250	4,805
	5,325	2,570	6,750	1,230	8	3	8	5	4,550	4,165	5,100	4,670
	5,475	2,620	6,900	1,280	8	3	8	5	4,300	3,940	5,000	4,580
	5,925	2,770	7,350	1,430	8	3	8	5	3,500	3,205	4,900	4,485

D55C-9

Mast type	Maximum Fork Height	Maximum Lowered Height	Fully Extended Height	Free Lift	Rated Load Capacities					
					D55C-9					
			With Load Backrest	With Load Backrest	Tilt Angle				Load Capacities	
					Single Pneumatics		Double Pneumatics		Single Pneumatics	Double Pneumatics
					FWD	BWD	FWD	BWD	LC 600mm	LC 600mm
	mm	mm	mm	mm	deg	deg	deg	deg	kg	kg
STD	2,750	2,220	4,160	165	8	10	8	10	5,500	5,500
	3,050	2,370	4,460	165	8	10	8	10	5,500	5,500
	3,400	2,545	4,810	165	8	10	8	10	5,500	5,500
	3,750	2,870	5,160	165	8	10	8	10	5,500	5,500
	4,000	2,995	5,410	165	8	10	8	10	5,500	5,500
	4,600	3,445	6,010	165	8	8	8	8	5,500	5,500
	5,000	3,645	6,410	165	8	5	8	5	5,000	5,200
	5,500	3,895	6,910	165	8	3	8	5	4,250	4,500
	5,800	4,045	7,210	165	8	3	8	5	3,600	3,700
FF	2,875	2,200	4,260	860	8	10	8	10	5,500	5,500
FFT	3,575	1,985	4,990	645	8	8	8	8	5,500	5,500
	3,875	2,080	5,285	740	8	8	8	8	5,500	5,500
	4,125	2,170	5,550	830	8	8	8	8	5,500	5,500
	4,575	2,320	6,000	980	8	3	8	8	5,500	5,500
	5,025	2,470	6,450	1,130	8	3	8	5	5,200	5,200
	4,325	2,570	6,750	1,230	8	3	8	3	4,500	4,600
	5,475	2,620	6,900	1,280	8	3	8	3	4,300	4,500
	5,925	2,770	7,350	1,430	8	3	8	3	3,300	3,500

Note : Mast Specifications & Rated Capacities are based on standard chassis with pneumatic tire and without side shifter.

Doosan Industrial Vehicle Europe nv
Europark-Noord 36A
9100 Sint-Niklaas
Belgium
Tel.: +32 3 760 09 87
Fax: +32 3 760 09 89
Website : www.doosan-iv.eu

EUD45S9-200908ENv1 (September 2020)

Authorized Dealer

D35S-9 / D40S-9 / D45S-9 / D50C-9 / D55C-9
D40SC-9 / D45SC-9 / D50SC-9 / D55SC-9

9-SERIES FORKLIFTS

Pneumatic Diesel 3.5 to 5.5 ton capacity

Euro Stage V

GENERAL SPECIFICATIONS

Characteristics	1.1	Manufacturer			Doosan	Doosan	Doosan	Doosan	Doosan	Doosan	Doosan	Doosan	Doosan
	1.2	Model			D35S-9	D40S-9	D45S-9	D50C-9	D55C-9	D40SC-9	D45SC-9	D50SC-9	D55SC-9
	1.3	Drive			Diesel	Diesel	Diesel	Diesel	Diesel	Diesel	Diesel	Diesel	Diesel
	1.4	Operator type			Seated	Seated	Seated	Seated	Seated	Seated	Seated	Seated	Seated
	1.5	Load Capacity	Q	kg	3,500	4,000	4,500	5,000	5,500	4,000	4,500	5,000	5,500
	1.6	Load Center	c	mm	600	600	600	600	600	500	500	500	500
	1.8	Load Distance: Center of Driveaxle to fork	x	mm	560	560	560	570	570	560	560	560	570
	1.9	Wheelbase	y	mm	2,015	2,015	2,115	2,115	2,115	2,015	2,015	2,115	2,115
Weight	2.1	Service weight		kg	5,795	6,100	6,530	6,930	7,300	5,795	6,100	6,530	6,930
	2.2	Axle Loading, Loaded Front/Rear		kg	8,390/905	9,115/985	9,960/1,070	10,770/1,160	11,565/1,235	8,390/905	9,115/985	9,960/1,070	10,770/1,160
	2.3	Axle Loading, Unloaded Front/Rear		kg	2,255/3,540	2,425/3,675	2,630/3,900	2,655/4,275	2,705/4,595	2,255/3,540	2,425/3,675	2,630/3,900	2,655/4,275
Tyres	3.1	Tyres: pneumatic (P), cushion (C)		-	P	P	P	P	P	P	P	P	P
	3.2	Tyre size, Front		-	8.25X15-14PR/ 7.50X16-12PR	300X15-18PR/ 7.50X16-12PR	300X15-18PR/ 7.50X16-12PR	300X15-18PR/ 7.50X16-12PR	300X15-18PR/ 7.50X16-12PR	8.25X15-14PR/ 7.50X16-12PR	300X15-18PR/ 7.50X16-12PR	300X15-18PR/ 7.50X16-12PR	300X15-18PR/ 7.50X16-12PR
	3.3	Tyre size, Rear		-	7.00X12-12PR	7.00X12-12PR	7.00X12-12PR	7.00X12-12PR	7.00X12-14PR	7.00X12-12PR	7.00X12-12PR	7.00X12-12PR	7.00X12-14PR
	3.5	Wheels, number Front/Rear (x = driven wheels)		-	2X/2	2X/2	2X/2	2X/2	2X/2	2X/2	2X/2	2X/2	2X/2
	3.6	Tread, Front	b11	mm	1,140 / 1,290	1,155 / 1,290	1,155 / 1,290	1,155 / 1,290	1,155 / 1,290	1,140 / 1,290	1,155 / 1,290	1,155 / 1,290	1,155 / 1,290
	3.7	Tread, Rear	b12	mm	1,115	1,115	1,115	1,115	1,115	1,115	1,115	1,115	1,115
Dimensions	4.1	Tilt of Mast/Fork carriage Forward/Backward	α/β	°	8/10	8/10	8/10	8/10	8/10	8/10	8/10	8/10	8/10
	4.2	Height, Mast lowered	h1	mm	2,225	2,230	2,230	2,230	2,230	2,225	2,230	2,230	2,230
	4.3	Free Lift	h2	mm	160	160	160	170	170	160	160	160	170
	4.4	Maximum fork height	h3	mm	3,000	3,000	3,000	3,050	3,050	3,000	3,000	3,000	3,050
	4.5	Height, Mast Extended	h4	mm	4,265	4,270	4,420	4,470	4,470	4,265	4,270	4,420	4,470
	4.7	Height of Overhead Guard	h6	mm	2,225	2,230	2,230	2,230	2,230	2,225	2,230	2,230	2,230
	4.8	Height of Seat	h7	mm	1,220	1,225	1,225	1,225	1,225	1,220	1,225	1,225	1,225
	4.19	Overall Length	l1	mm	4,160	4,200	4,480	4,530	4,560	4,160	4,200	4,480	4,530
	4.20	Length to Forkface	l2	mm	2,995	3,000	3,260	3,300	3,340	2,995	3,000	3,260	3,300
	4.21	Overall Width	b1	mm	1,370	1,455	1,455	1,455	1,455	1,370	1,455	1,455	1,455
	4.22	Fork Dimensions		mm	50X150X1,050	50X150X1,050	50X150X1,200	50X150X1,200	50X150X1,200	50X150X1,050	50X150X1,050	50X150X1,200	50X150X1,200
	4.23	Fork carriage ISO 2328, class/type A,B		-	III	III	IV	IV	IV	III	III	IV	IV
	4.24	Fork carriage width	m1	mm	1,250	1,250	1,330	1,330	1,330	1,250	1,250	1,330	1,330
	4.31	Ground Clearance, loaded, below mast	m1	mm	150	160	160	160	160	150	160	160	160
	4.32	Ground Clearance, center of wheelbase	m2	mm	205	205	205	205	205	205	205	205	205
	4.34.1	Aisle width for pallets 1,000 x 1,200 crossways	Ast	mm	4,515	4,560	4,610	4,640	4,670	4,515	4,560	4,610	4,640
	4.34.2	Aisle width for pallets 800 x 1,200 crossways	Ast	mm	4,715	4,760	4,810	4,840	4,870	4,715	4,760	4,810	4,840
	4.35	External Turning Radius	Wa	mm	2,755	2,800	2,850	2,870	2,900	2,755	2,800	2,850	2,870
	4.36	Internal Turning Radius	b13	mm	2,670	2,725	2,775	2,845	2,885	2,670	2,725	2,775	2,845
Performance data	5.1	Travel Speed, Loaded/unloaded		km/h	24.0/26.0	24.0/26.0	24.0/26.0	24.0/26.0	24.0/26.0	24.0/26.0	24.0/26.0	24.0/26.0	24.0/26.0
	5.2	Lift Speed, Loaded/unloaded		mm/s	0.56/0.60	0.55/0.60	0.54/0.60	0.53/0.60	0.52/0.60	0.56/0.60	0.55/0.60	0.54/0.60	0.53/0.60
	5.3	Lowering Speed, Loaded/unloaded		mm/s	0.45/0.50	0.45/0.50	0.45/0.50	0.45/0.50	0.45/0.50	0.45/0.50	0.45/0.50	0.45/0.50	0.45/0.50
	5.4	Drawbar pull, Loaded (@ 1.6km/h)		N	34,075	33,540	33,564	33,390	33,170	34,075	33,540	33,564	33,390
	5.5	Max. Drawbar pull, Loaded		N	37,498	36,894	36,970	36,816	36,595	37,498	36,894	36,970	36,816
	5.7	Gradeability, Loaded (@ 1.6km/h)		%	38.5	34.5	31.5	28.5	26	38.5	34.5	31.5	28.5
	5.8	Max. Gradeability, Loaded		%	43	38.5	35	31.5	29	43	38.5	35	31.5
	5.10	Service Brake		-	Foot/Hyd	Foot/Hyd	Foot/Hyd	Foot/Hyd	Foot/Hyd	Foot/Hyd	Foot/Hyd	Foot/Hyd	Foot/Hyd
Combustion Engine	7.1	Engine Manufacturer/type		-	DI	DI	DI	DI	DI	DI	DI	DI	DI
	7.2	Engine power according to DIN ISO1585		kW	55.4	55.4	55.4	55.4	55.4	55.4	55.4	55.4	55.4
	7.3	Rated Speed		min-1	2,200	2,200	2,200	2,200	2,200	2,200	2,200	2,200	2,200
	7.3.1	Torque at 1/min		N•m	360 @ 1,400	360 @ 1,400	360 @ 1,400	360 @ 1,400	360 @ 1,400	360 @ 1,400	360 @ 1,400	360 @ 1,400	360 @ 1,400
	7.4	Number of Cylinders/Displacement	cc	-/cm3	4/3,409	4/3,409	4/3,409	4/3,409	4/3,409	4/3,409	4/3,409	4/3,409	4/3,409
	7.5	Fuel consumption according to VDI cycle		l/h	5.2	5.2	5.2	5.2	5.2	5.2	5.2	5.2	5.2
	7.10	Battery Voltage/normal capacity		V/Ah	12/100	12/100	12/100	12/100	12/100	12/100	12/100	12/100	12/100
Add. Data	10.1	Operating pressure for attachments		bar	160	160	160	160	160	160	160	160	160
	10.2	Oil volume for attachments		l/min	110	110	110	110	110	110	110	110	110
	10.4	Fuel Tank Capacity		l	105	105	119	119	119	105	105	119	119
	10.7	Sound level at the driver's ear according to EN 12 053		dB(A)	79	79	79	79	79	79	79	79	79

Note : Specification values quoted in this specification sheet have been rounded. Performance may vary due to operation conditions.
Products and specifications are subject to improvement and change without prior notices.

DIMENSIONAL DRAWING

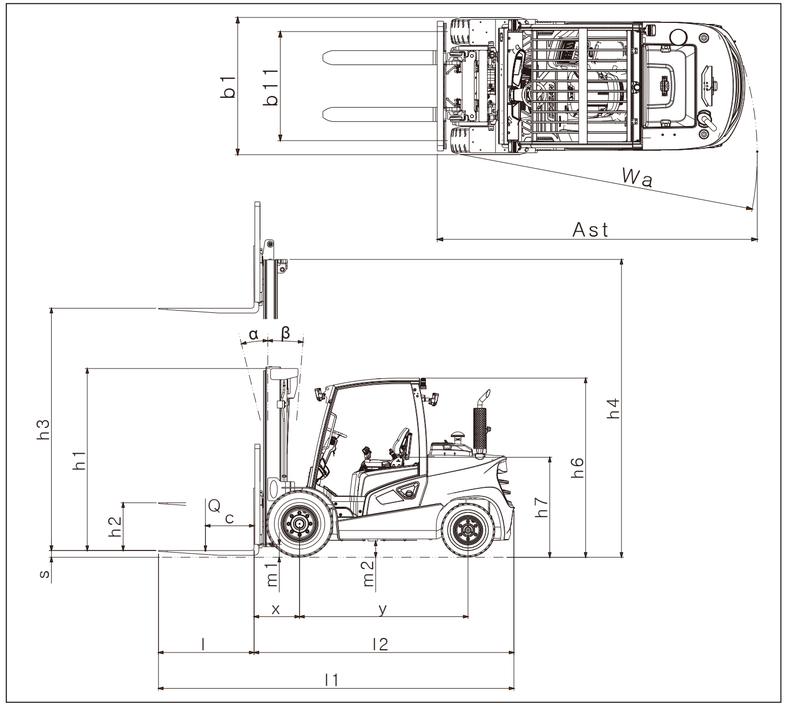

MAST SPECIFICATIONS and RATED CAPACITIES

D35S-9, D40SC-9

Mast type	Maximum Fork Height	Maximum Lowered Height	Fully Extended Height	Free Lift	Rated Load Capacities							
					D35S-9, D40SC-9							
					Tilt Angle				Load Capacities			
					Single Pneumatics		Double Pneumatics		Single Pneumatics		Double Pneumatics	
			With Load Backrest	With Load Backrest	FWD	BWD	FWD	BWD	LC 5000mm	LC6000mm	LC5000mm	LC6000mm
	mm	mm	mm	mm	deg	deg	deg	deg	kg	kg	kg	kg
STD	3,000	2,235	4,260	155	8	10	8	10	4,000	3,655	4,000	3,655
	3,300	2,385	4,560	155	8	10	8	10	4,000	3,655	4,000	3,655
	3,650	2,560	4,910	155	8	10	8	10	4,000	3,655	4,000	3,655
	4,000	2,885	5,260	155	8	10	8	10	4,000	3,655	4,000	3,655
	4,250	3,010	5,510	155	8	10	8	10	4,000	3,655	4,000	3,655
	4,850	3,460	6,110	155	8	10	8	10	3,650	3,335	3,750	3,430
	5,250	3,660	6,510	155	8	8	8	10	3,200	3,925	3,600	3,290
FF	3,000	2,215	4,235	1,015	8	10	8	10	4,000	3,655	4,000	3,500
FFT	4,000	2,095	5,260	895	8	8	8	8	4,000	3,660	4,000	3,655
	4,250	2,185	5,525	985	8	8	8	8	4,000	3,660	4,000	3,660
	4,500	2,270	5,780	1,070	8	8	8	8	4,000	3,660	4,000	3,660
	4,700	2,335	5,975	1,135	8	5	8	8	4,000	3,660	4,000	3,660
	5,150	2,485	6,425	1,285	8	5	8	5	3,700	3,385	3,850	3,525
	5,600	2,635	6,875	1,435	8	3	8	3	3,600	3,295	3,700	3,385
	6,050	2,785	7,325	1,585	8	3	8	3	3,000	2,745	3,550	3,250
	6,500	2,935	7,775	1,735	8	3	8	3	2,350	2,150	3,450	3,155
	7,000	3,115	8,275	1,915	8	3	8	3	1,750	1,600	3,300	3,020

Note : Mast Specifications & Rated Capacities are based on standard chassis with pneumatic tire and without side shifter.